Mounting systems for solar technology

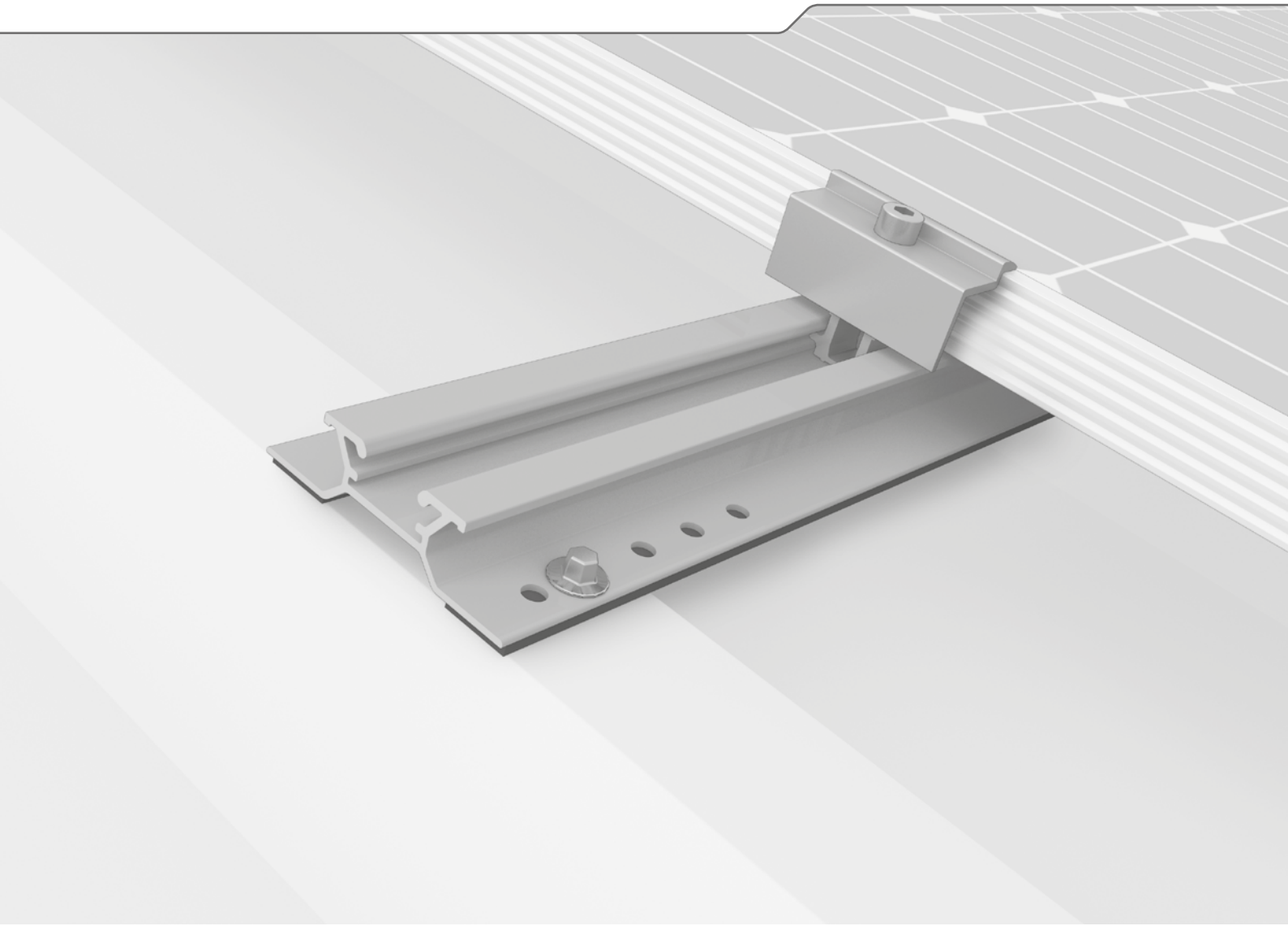

Assembly instructions

MiniRail System

Content

- Tools overview 3
- General safety information 4
- The following guidelines apply 5
- Components 6
- Assembly 8
- Assembly with 5° elevation 11
- Notes 13

Quality tested – several certifications

K2 Systems stands for secure connections, highest quality and precision. Our customers and business partners have known that for a long time. Independent institutes have tested, confirmed and certified our capabilities and components.

Please find our quality and product certificates under:
www.k2-systems.com/en/technical-information

Tools overview

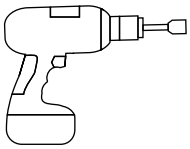

6 mm

8 mm

6 - 30 Nm
(4.5 - 22.2 lb-ft)

6 mm

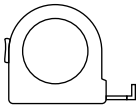

≥ 3.0 m

≥ 6.0 m

General safety information

Please note that our general mounting instructions must be followed at all times and can be viewed online at www.k2-systems.com/en/technical-information

- The equipment may only be installed and operated by qualified and adequately trained installers.

- Prior to installation, ensure that the product complies with on-site static loading requirements. For roof-mounted systems, the roof load-bearing capacity must always be checked.

- National and local building regulations and environmental requirements must be adhered to.

- Compliance with health and safety regulations, accident prevention guidelines and applicable standards is required.
  · Protective equipment such as safety helmet, boots and gloves must be worn.
  · Roofing works must be in accordance with roofing regulations utilising fall protection safeguards when eaves height exceeds 3 m.
  · At least two people must be present for the duration of the installation work in order to provide rapid assistance in the event of an emergency.

- K2 mounting systems are continuously developed and improved and the installation process may thereby change at any time. Prior to installation consult our website at www.k2-systems.com/en/technical-information for up-to-date instructions. We can send you the latest version on request.

- The assembly instructions of the module manufacturer must be adhered to.

- Equipotential bonding/grounding/earthing between individual parts is to be performed according to country specific standards, as well as national laws and regulations.

- At least one copy of the assembly instructions should be available on site throughout the duration of the installation.

- Failure to adhere to our general safety and assembly instructions and not using all system components, K2 is not liable for any resulting defects or damages. We do not accept liability for any damage resulting in the use of competitor's parts. Warranty is excluded in such cases.

- German law shall apply excluding the UN Convention on CISG. Place of venue is Stuttgart. Our General Terms of Business apply.

- If all safety instructions are adhered to and the system is correctly installed, there is a product warranty entitlement of 12 years! We strongly recommend reviewing our terms of guarantee, which can be viewed at www.k2-systems.com/en/technical-information
  We will also send this information on request.

- Dismantling of the system is performed in reverse order to the assembly.

- K2 stainless steel components are available in different corrosion resistance classes. Each structure or component must be carefully checked for possible corrosion exposure.

The following guidelines apply

The MiniRail system can be used without further testing by K2 systems in the following standard conditions. The system is also suitable for higher requirements. However, if a value exceeds the standard conditions, please contact K2 Systems.

Roof requirements

- Minimum trapezoidal sheet thickness of 0.5 mm (for steel S235 according to DIN EN 10025-1 and aluminium with a tensile strength of 195 N/mm²)
- Min. 22 mm crest width (the project-specific minimum high crest width dimension can be found in the Base On report)
- Crest spacing 101 - 350 mm
- Flush area surrounding the bore hole: ≥ 20 mm
- Roof pitch regularly: 5 - 75°

Structural requirements

- The static verification of components is automatically calculated for each location using our Base On planning software
- Sufficient holding force of the roof covering on the support or substructure

Important mounting instructions

- On-site general standards and regulations for lightning protection must be observed and consultation with a specialist to create a lightning protection concept is recommended (use lightning protection clamp if necessary).
- We recommend a thermal separation after maximum of 18.8 m.
- If the trapezoidal sheet is fastened with storm washers, please do not fasten the MiniRails on the storm washers! Spacing must be measured beforehand.
- The MiniClamps are only suitable for modules with a frame height of 30 - 50 mm
- MiniClamps can be used universally for landscape or portrait mounting applications.
- Adhere to module manufacturer recommendations for clamping area and module installation (see module manufacturer instructions) – tightening torque 14 Nm with M8 screw.
- Fasten the MiniRail to trapezoidal sheets with building approved self-tapping screws.
- No pre-drilling required! Predrill only with overlapping sheets to reduce spacing.

Components

MiniRail and MiniClamps

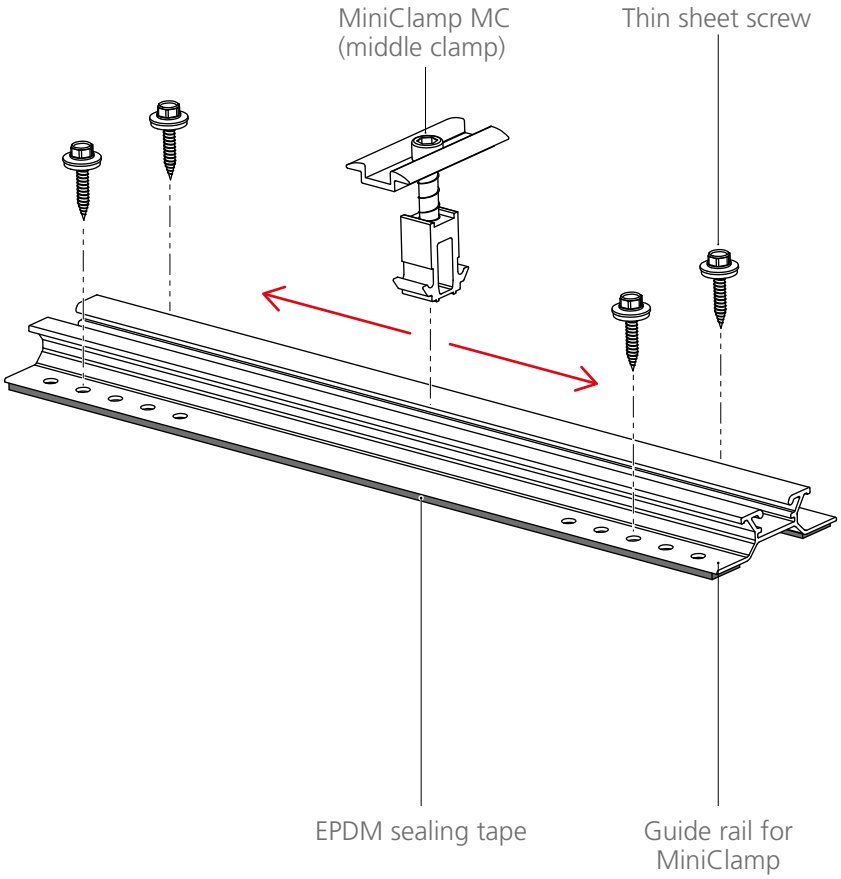

2002341

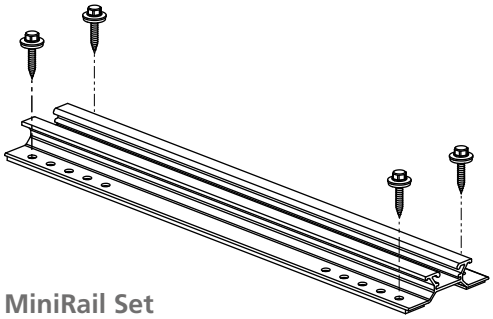

MiniRail Set

2002558 / 2002609

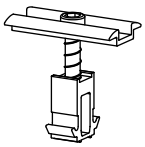

MiniClamp MC 30 - 50 mm
aluminium mill finish / black anodised

2002559 / 2002610

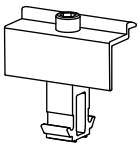

MiniClamp EC 30 - 50 mm
aluminium mill finish / black anodised

Elevation with MiniFive

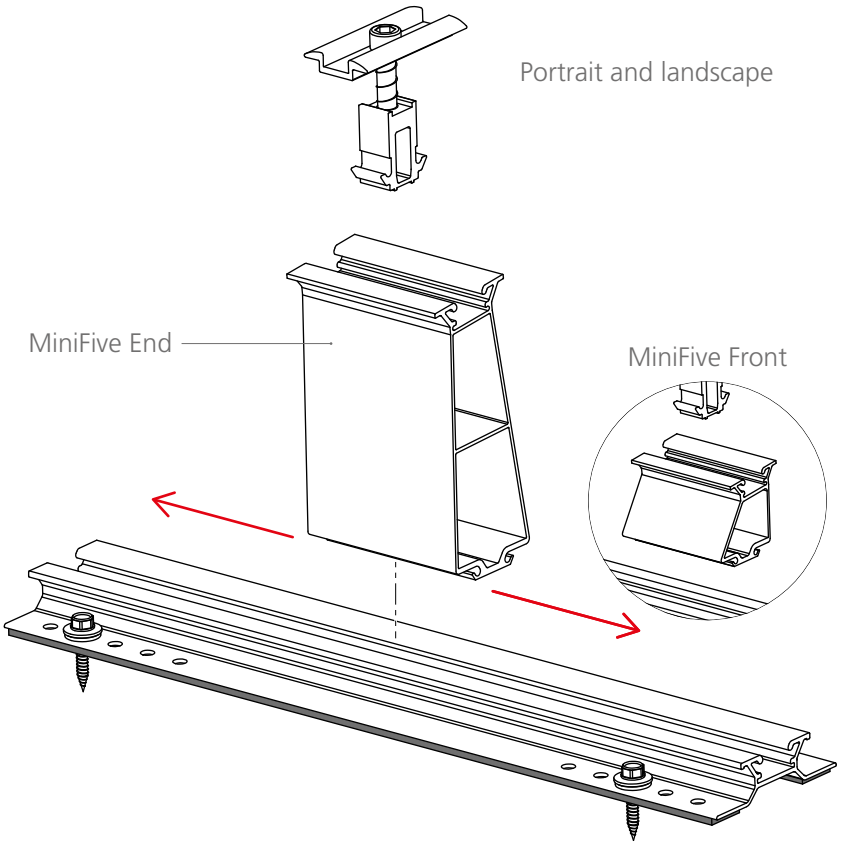

Prescribed placement of MiniRail with MiniFive Front und End

Portrait

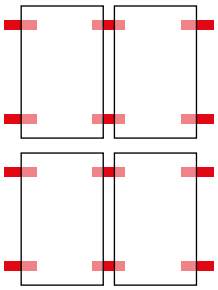

Landscape

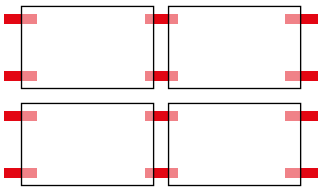

MiniRail with MiniFive Front or End

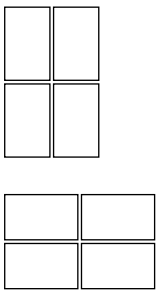

2002398/2002399

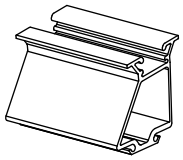

MiniFive Front 5/9 cm

Front side elevation;
normal/high snow loads

2002400/2002401

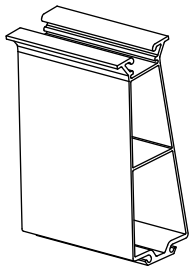

MiniFive End 5/9 cm

Rear side elevation;
normal/high snow loads

2002419

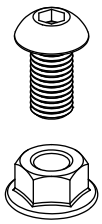

MiniFiveFix

For fixing in the centre of
the elevation element

Assembly

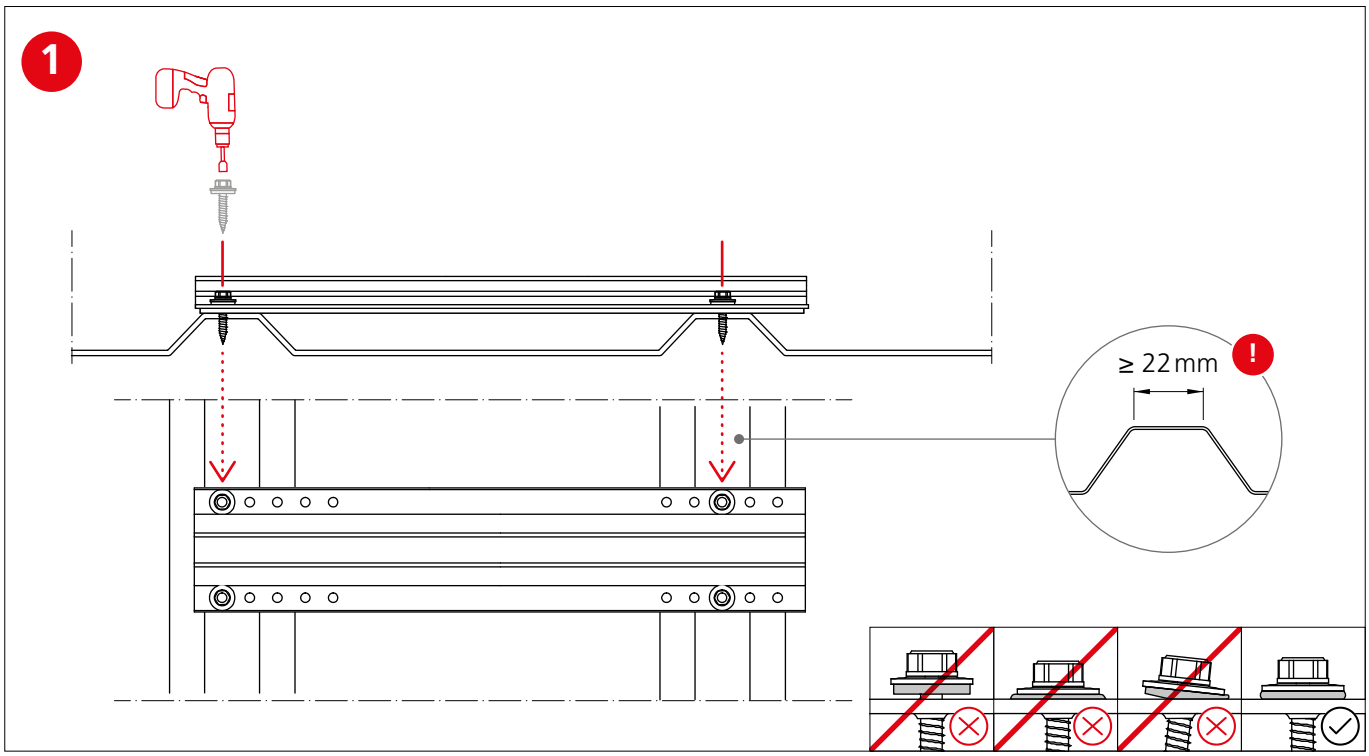

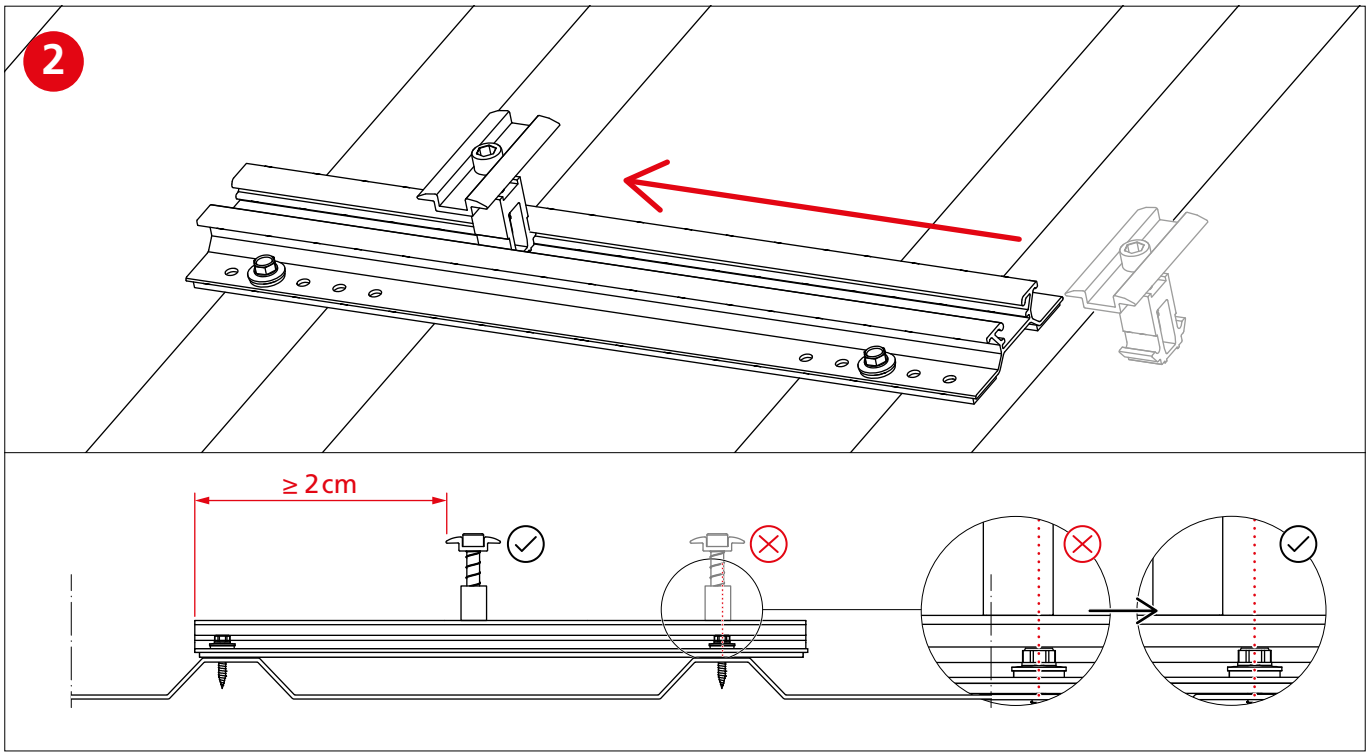

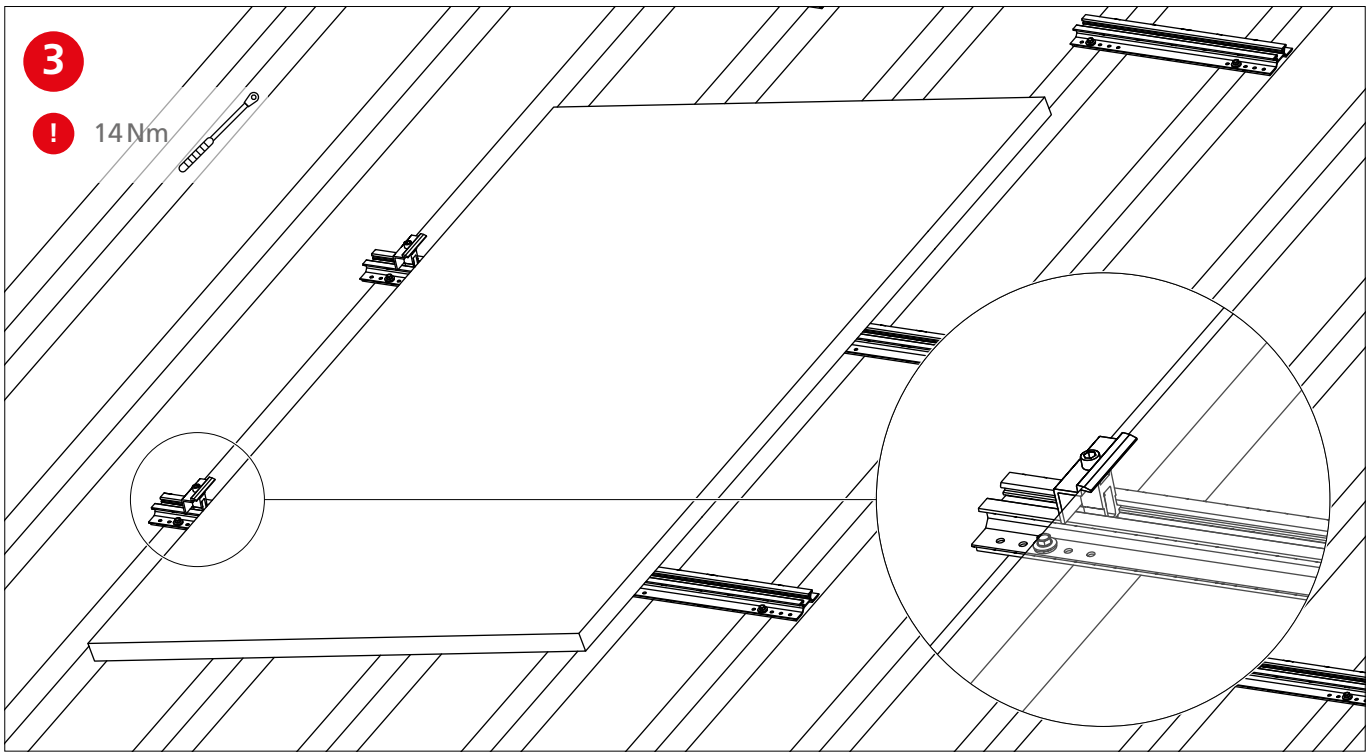
3
!
14 Nm

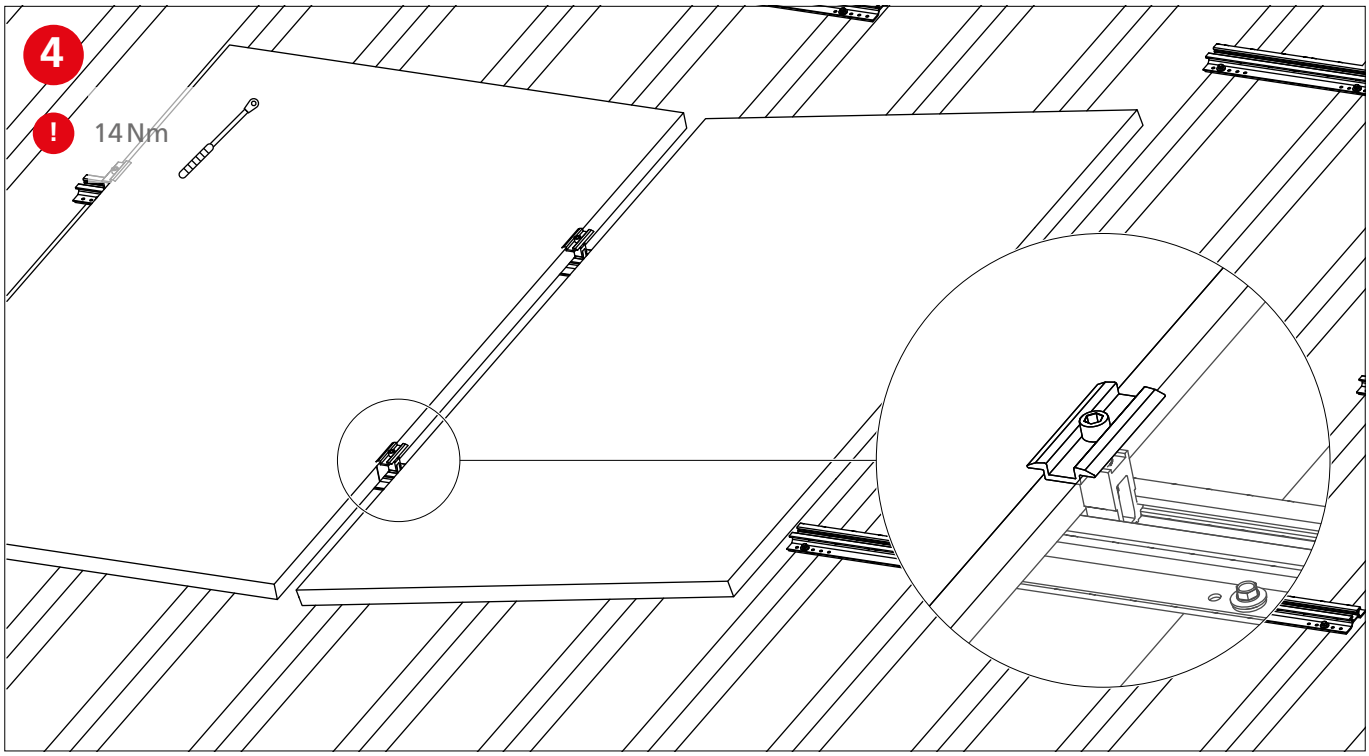
4
!
14 Nm

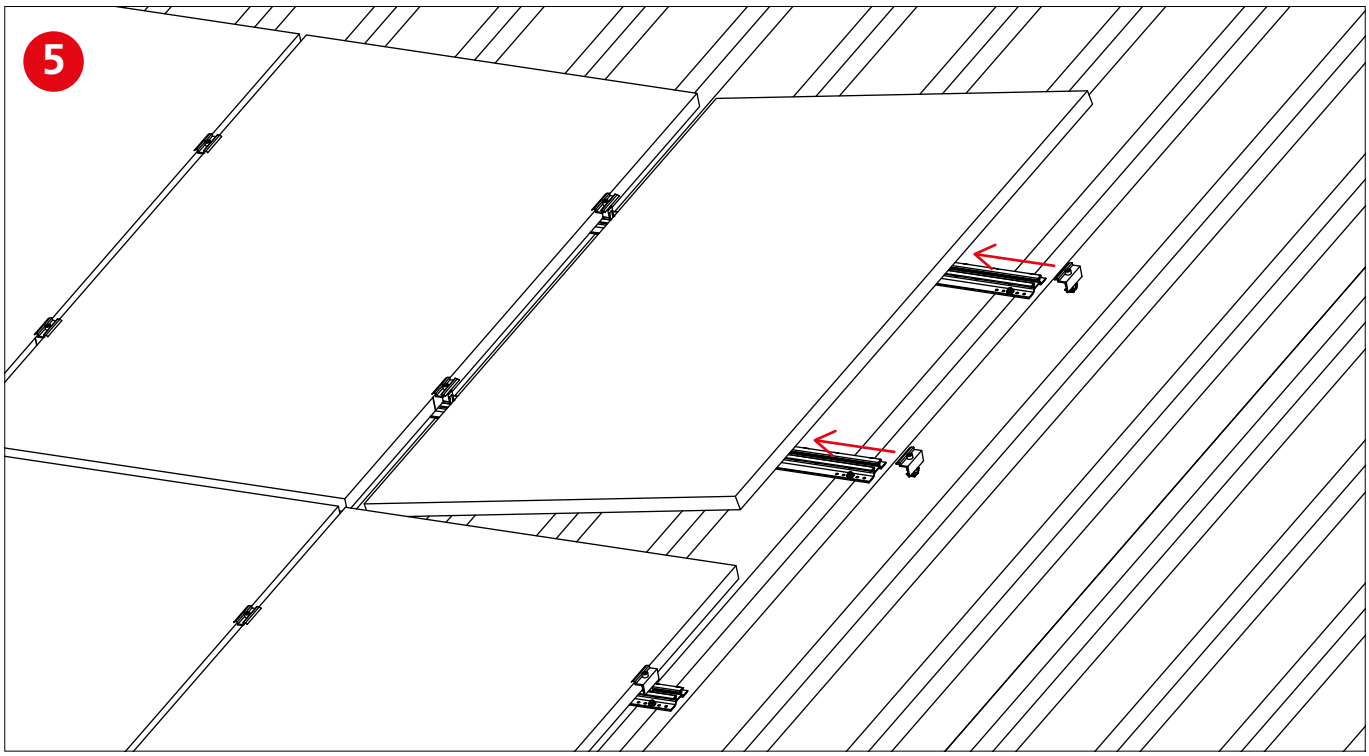
5

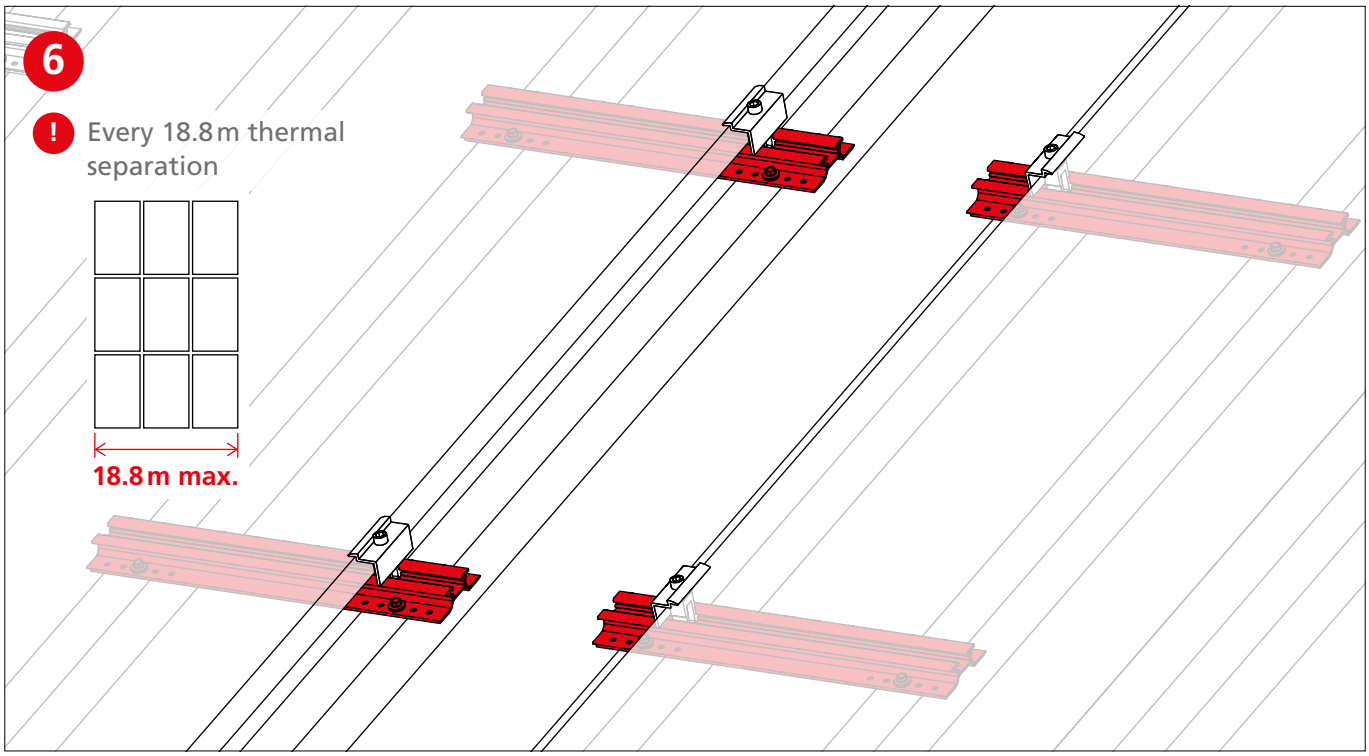
6
! Every 18.8 m thermal separation
18.8 m max.

Assembly with 5° elevation

Portrait and Landscape

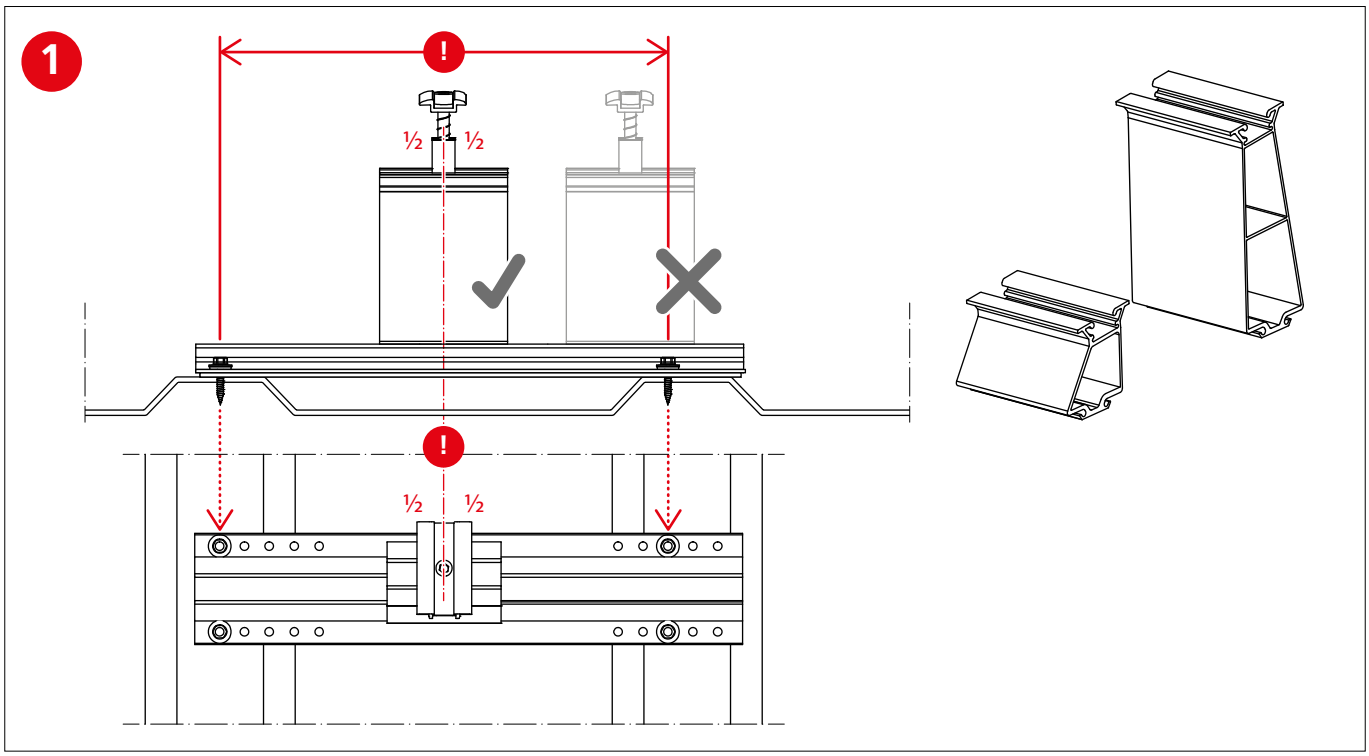

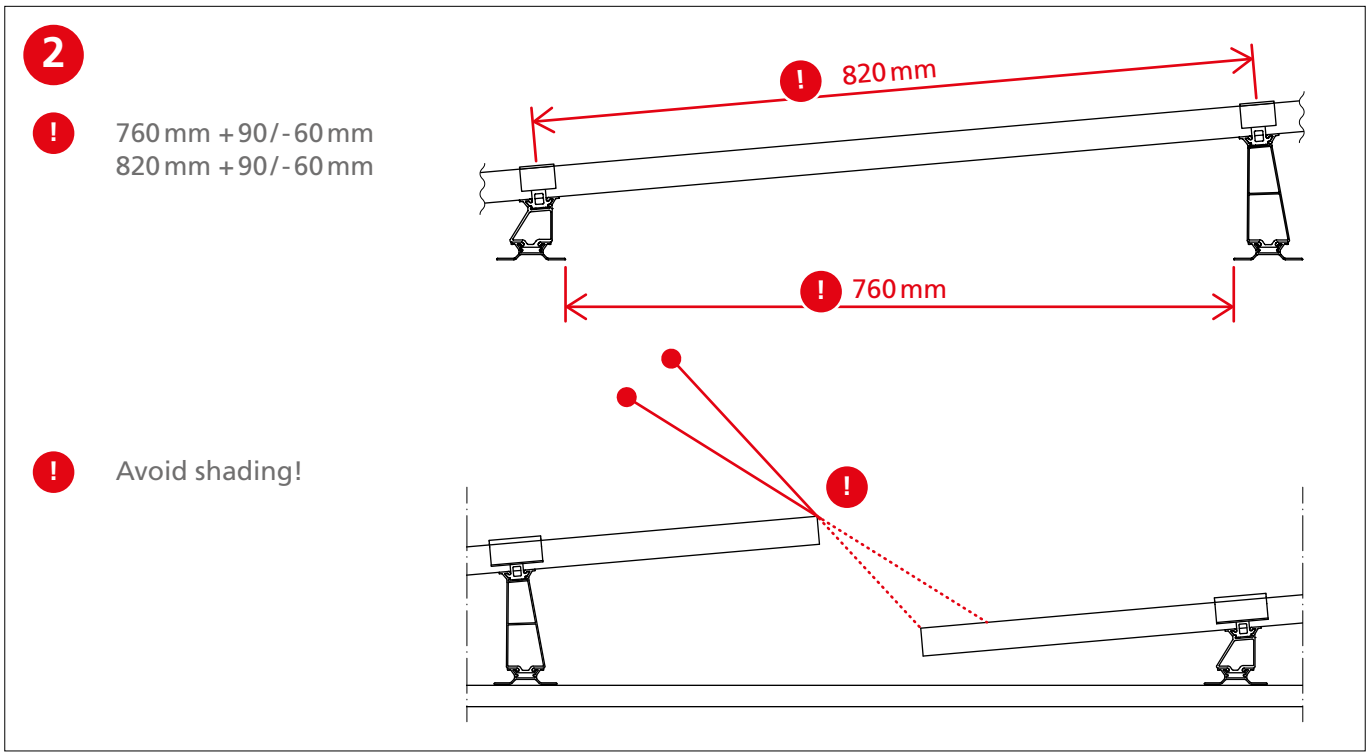

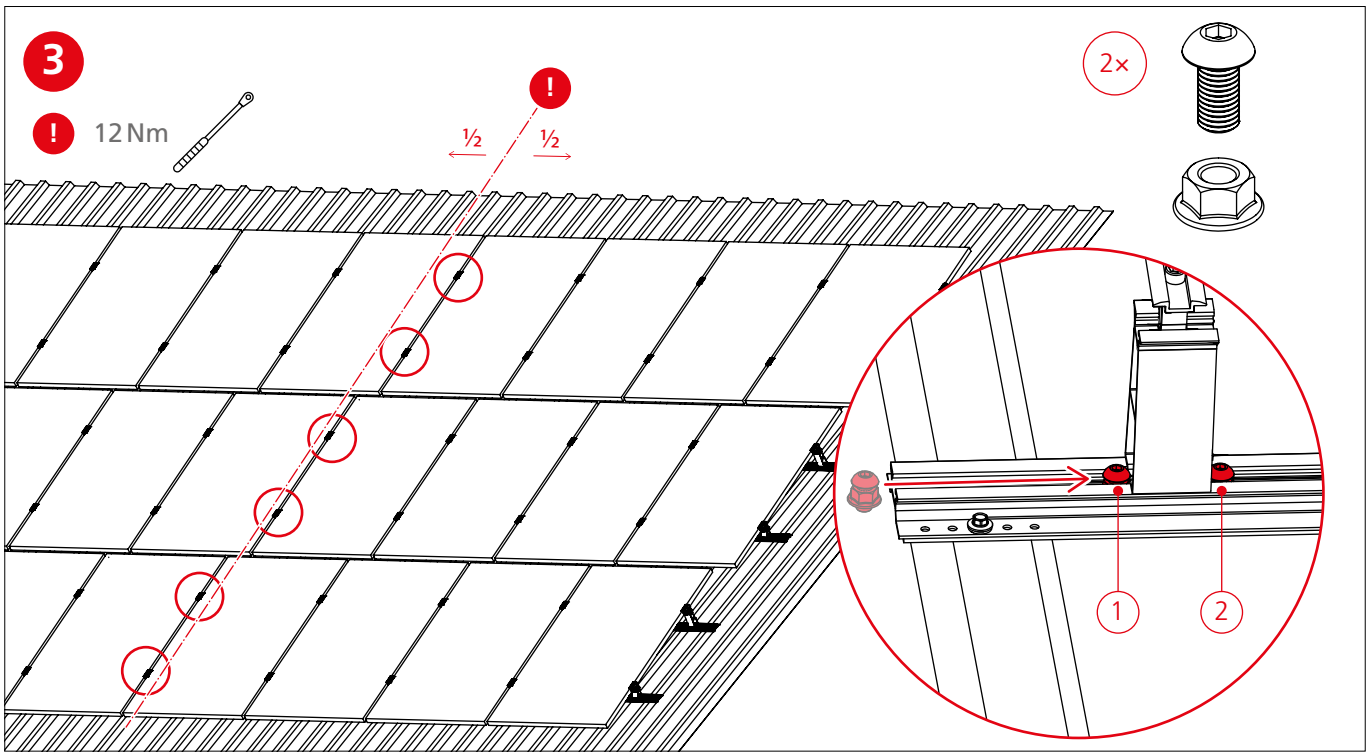
3
12 Nm
½
½
2×
1
2

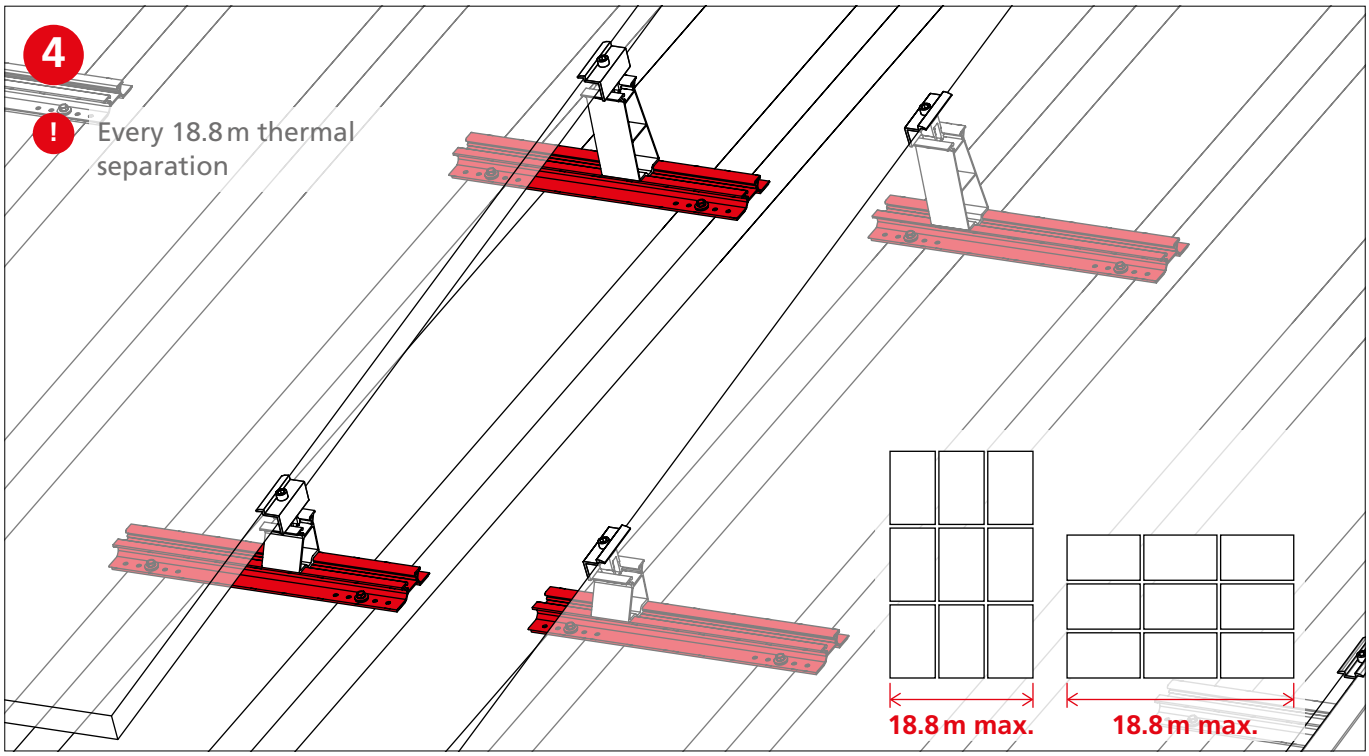
4
Every 18.8 m thermal separation
18.8 m max.
18.8 m max.

Notes

Notes

Thank you for choosing a K2 mounting system.

Systems from K2 Systems are quick and easy to install. We hope these instructions have helped. Please contact us with any questions or suggestions for improvement.
Our contact data:

- **www.k2-systems.com/en/contact**
- **Service Hotline: +49 (0)7159 42059-0**

German law shall apply excluding the UN Convention on CISG. Place of venue is Stuttgart.

Our General Terms of Business apply. Please refer:
www.k2-systems.com

K2 Systems GmbH

Industriestraße 18
71272 Renningen
Germany

+49 (0) 7159 - 42059 - 0
info@k2-systems.com
www.k2-systems.com